产品描述：TJC14 连接器

Product Description: TJC14 Connector

目录

INDEX

1. 更改履历 Change History
2. 范围 Scope
3. 产品描述 Product Description
4. 相关标准 Related Standards
5. 参数范围 Parameter Ratings
6. 产品性能 Performance
7. 测试分组 Test Sequences

1.更改履历 Change History

序号 No.:	版本号 Version No.	更改前描述 Description Before Modification	更改后描述 Description After Modification	日期 Date
1	1	PS0132/PS0133/PS0579/PS1157/PS1467/PS1468 /PS1747/PS2057/PS2614/PS2635/PS3714	新版规格书 PS3852	2015.10.31
2	2	/	调整部分试验参数	2017.11.13
3	3	/	更改图纸商标 LOGO	2019.1.11
4				
5				

2 适用范围 Scope

本产品规格书适用于浙江合兴电子元件有限公司生产的 CTB 2.5P 阴型 & 阳型电子连接器，产品名称：TJC14-nY&TJC14-nA&TJC14-nAW&TJC14-nAD。

This product specification covers the requirement for Cable to Board 2.5mm pitch Receptacle & Plug connector, which is designed and manufactured by CWB Electronics(ZheJiang) Co.,LTD. P/N: TJC14-nY&TJC14-nA&TJC14-nAW&TJC14-nAD.

3.产品描述 Product Description

TJC14 系列产品为家电连接器产品，产品部件组成如下：

The TJC14 seriers connector designed for home appliances connection. Part checklist as following form:

Name	Part name	Notes
阳连接器 Header	TJC14-nA	Wafer:PA66 UL94V-0，PA66 UL94V-2 Post: Brass Tin over Nickel Plated
阳连接器 Header	TJC14-nAW	Wafer:PA66 UL94V-0，PA66 UL94V-2 Post: Brass Tin over Nickel Plated
阳连接器 Header	TJC14-nAD	Wafer:PA66 UL94V-0 Post: Brass Tin over Nickel Plated
条形连接器孔座 Housing	TJC14-nY	PA66 UL94V-0
插簧	TJC14	Phosphor bronze， Tin Plated

4 相关标准 Related Standards

以下参考文件是本规格书的一个组成部份。若本规格书中的要求与产品图纸发生冲突，则产品图中的要求为优先；若本规格书中的要求与参考文件中的要求冲突，则本规格书为优先。

The following documents form a part of this specification. In the event of conflict between the requirements of this specification and the product drawing, the product drawing shall take precedence. In the event of conflict between the requirements of this specification and the referenced documents, this specification shall take precedence.

GB/T 2421 电工电子产品环境试验 第一部分 总则
Testing Method for Environmental of Electrical Connectors Class 1: General Principles

GB/T 2423 电工电子产品环境试验方法
Testing Method for Environmental of Electrical Connectors

GB/T 2424 电工电子产品环境试验导则
Testing Method for Environmental of Electrical Connectors

GB/T 5095 电子设备用机电元件基本试验规程及测量方法
Testing procedure/Method for components of electric equipment

产品符合合兴企标 Q/HX J1150001 《产品及所用材料的环保要求》 I 类或顾客要求。

The connector should comply with CWB standard Q/HX J1150001 Class I or customer’s requests.

5 参数范围 Parameter Ratings：

额定电流 Rated Current	3A
适用 PCB 板 Applicable P.C.B	Board Thickness：1.2mm-1.6mm Hole Diameter：0.9mm-1.0mm
额定电压 Rated Voltage	250V [AC(有效值 rms)/DC]
使用温度范围 Operating temperature range	-40℃～+105℃（Including temperature rise）
适用线型 Applicable wires	Wire Size：AWG26～AWG22 (0.129 mm²-0.326 mm²) Insulation Diameter：1.3mm-1.6mm

6 产品性能 Performance

6.1 机械性能 Mechanical

序号 No.	项 目 Item	测试条件 Test Condition	规 格 Requirement	
6.1.1	外观 Appearance	目测 Checking by eye 视力：1.0 以上 Eyesight: > 1.0 照明：（200～300）lx Lamp: （200～300）lx 目测距离：（0.3～0.5）m Space: （0.3～0.5）m **GB/T 5095.1 Method 1a**	1.塑料件表面应无明显疤痕、凹陷、开裂及影响使用的变形。 Plastic part: smooth and flat surface without discolor, broken, crack, and distortion, etc. 2 金属件表面无锈蚀、氧化 、无明显的机械损伤及电镀层脱落等缺陷。 Metal part: bright and even surface without rust, oxide, fog and obvious physical damage, etc.	
6.1.2	端子的插入力与固定力 Insertion force and Retention Force for Contact	固定连接器和/或测力计，在连接器轴线方向拔出；速度 25 ± 3 mm/min Axial Insert and withdraw force on the terminal in the housing at a rate of 25 ± 3 mm per minute. **GB/T 5095.8 Method 15A / EIA-364-29B**	插入力(Insertion) MAX.	固定力(Retention) MIN.
			10N	15N
6.1.3	针的固定力 Retention Force for Pin	固定连接器和/或测力计，在连接器轴线方向插入和拔出；速度不大于 25 mm/min. Axial Insert and withdraw force on the contact in the wafer at a rate less than 25 mm/min. **GB/T 5095.8 Method 15A / EIA-364-29B**	15N MIN	
6.1.4	插簧与插针的插拔力 Insertion and Withdrawal Force for Pin in the Contact	固定端子或测力计，在其轴线方向上使端子插入和拔出，速度 25 ± 3 mm/min。 Apply axial Insert and withdraw force on the terminal in the housing at a rate of 25 ± 3 mm per minute. **GB/T5095.8 Method 12B /EIA-364-13B**	插入力 Insertion MAX	首次拔出力 Withdrawal MIN
			9.8N	0.2N

6.1.5	压着部位抗张强度 Crimping Pull Out Force	在试验装置夹头中固定试验样品，在连接的轴线方向施加张力;速度不大于 25mm/min. Fix the crimped contact, Axial pull out force on the contact and wire at a rate less than 25 mm/min. **GB/T5095.8 Method 16D / EIA-364-08B**	AWG 26: 20N Min. AWG 24: 30N Min. AWG 22: 40N Min.
6.1.6	成品插入力与拔出力 Insertion and Withdrawal Force for Connector	固定连接器和/或测力计，在连接器轴线方向插入和拔出；速度不大于25mm/min. Apply Axial Insert and withdraw force on the connector at a rate less than 25 mm/min. **GB/T 5095.7 Method 13B / EIA-364-13B**	

PIN	首次插入力 Insertion (1st) MAX	首次拔出力 Withdrawal (1st) MIN	五十次后拔出力 Withdrawal (50st) MIN
2P	28N	8N	5.5N
3P	30N	10N	6N
4P	35N	12N	6.5N
5P	45N	15N	7N
6P	55N	18N	8N
7P	65N	21N	9N
8P	80N	25N	10N
9P	90N	28N	11N
10P	95N	32N	13N
11P	100N	35N	15N
12P	105N	38N	17N
13P	110N	42N	20N
14P	115N	45N	23N
15P	120N	50N	26N

6.1.7	机械振动 Random Vibration	插合连接器，串联在一直流电源上,电流100mA;并模拟正常工作状态；振频为（10～55～10）Hz，每个循环时间为1分钟，振幅1.52mm。沿XYZ三轴正反方向各循环2h。 Mated connectors subjected to following vibration conditions, for a period of 2 hours in each of 3 mutually perpendicular axes, 100 mA current shall be applied. Frequency: (10~55～10）HZ/minute Amplitude: 1.52mm **GB/T 5095.4 Method 6D / EIA-364-28D**	外观：无损伤（参照6.1.1） Appearance: No damage.(refer to 6.1.1) 接触电阻：0.02Ω Max。 Contact resistance: 0.02Ω Max. 中断: 1μsec Max。 <1μsec discontinuity 插拔力：符合6.1.6要求 Insertion and Withdrawal Force ：Meet 6.1.6.
6.1.8	机械冲击 Shock	连接器相配，沿XYZ三轴正反方向各冲击3次(总共18次)，在测试过程中通以100mA电流。 冲击强度：490m/s^2 持续时间：11ms Mated connectors and subject to the following shock conditions, 3times of shock shall be applied for each 6 directions along 3 mutually perpendicular axes, passing DC 100mA current during the test.(Total of 18 shocks) Test Pulse: Half Sine Peak Value: 490m/s^2 Duration: 11ms **GB/T 5095.4 Method 6C / EIA-364-27B**	外观：无损伤（参照6.1.1） Appearance: No damage.(refer to 6.1.1) 接触电阻：0.02Ω Max。 Contact resistance: 0.02Ω Max. 中断: 1μsec Max。 <1μsec discontinuity

6.1.9	机械寿命 Durability	以每分钟 10 次的速度插拔 50 次。 50 cycles mated and unmated test at the speed 10 cycles per minute **GB/T 5095.5 Method 9A / EIA-364-09C**	外观：无损伤（参照6.1.1） Appearance: No damage.(refer to 6.1.1) 接触电阻：0.02Ω Max。 Contact resistance: 0.02Ω Max.

6.2 电气性能 Electrical

序号 No.	项 目 Item	测试条件 Test Condition	规格 Requirement
6.2.1	接触电阻 Low Level Contact Resistance	插配阴阳连接器后,用小功率电路进行测试 Mate connectors with dry circuit to test Contact Resistance **GB/T 5095.2 Method 2b / EIA-364-23B**	0.01 Ω Max. (Initial) 0.02 Ω Max. (Final)
6.2.2	绝缘电阻 Insulation Resistance	在相邻接触件之间或地线之间,用 500V DC 电压进行测试. Apply a voltage of 500 VDC between adjacent contacts and between contacts to ground. **GB/T 5095.2 Method 3A / EIA-364-21C**	1000 MΩ Min. (Initial) 500MΩ Min （Final）
6.2.3	耐电压 Withstand Voltage	相邻接触件之间或地线之间施加 1000V AC (有效值),漏电流 1mA 的电压作用,时间 1min. Apply a voltage of AC 1000 V for 1 minute between adjacent contacts and between contacts to ground. **GB/T 5095.2 Method 4A / EIA-364-20B**	外观：无击穿和飞弧现象 Appearance: No Breakdown
6.2.4	温升 Temperature Rise	插合连接器，通以最大允许电流，测温度的差值 Mate connectors and measure the temperature rise of contact when the maximum AC rated current is passed. **GB/T 5095.3 Method 5E / EIA-364-70**	∆30℃ Max(∆30K Max)

6.3 环境性能 Environmental

序号 No.	项 目 Item	测试条件 Test Condition	规 格 Requirement
6.3.1	耐高温 Heat Resistance	连接器配合后，于 105±2℃的空气中放置 240 小时，再回到室温中放置 1-2 小时测定 Mate connector exposed to the condition of 105±2℃ for 240 hours. Recovery time 1~2 hours **GB/T 5095.6 Method 11i / EIA-364-17B**	外观：无损伤（参照6.1.1） Appearance: No damage.(refer to 6.1.1) 接触电阻：0.02Ω Max. Contact resistance: 0.02Ω Max. 绝缘电阻：500MΩ Min. Insulation Resistance ：500MΩ Min. 耐电压：无击穿和飞弧现象. Withstand Voltage: No Breakdown or flashover.

6.3.2	耐低温 Cold Resistance	连接器配合后，于-40±2℃的空气中放置 96 小时，再回到室温中放置 1-2 小时测定 Mate connector exposed to the condition of -40±2℃ for 96 hours. Recovery time 1~2 hours **GB/T 5095.6 Method 11J / EIA-364-17B**	外观：无损伤（参照6.1.1） Appearance: No damage.(refer to 6.1.1) 接触电阻：0.02Ω Max。 Contact resistance: 0.02Ω Max.
6.3.3	恒定湿热 Humidity	温度(40±2)℃, 相对湿度(90～95)％ 搁置时间 240h，取出恢复 2h 后检查. Mated connector exposed to the condition of +40±2℃ @ 90~95% Humidity for 240 hours. Recovery time 1~2 hours **GB/T 5095.6 Method 11C /EIA-364-31B**	外观：无损伤（参照6.1.1） Appearance: No damage.(refer to 6.1.1) 接触电阻：0.02Ω Max。 Contact resistance: 0.02Ω Max. 绝缘电阻：500MΩ Min. Insulation Resistance ：500 MΩ Min. 耐电压：无击穿和飞弧现象. Withstand Voltage: No Breakdown or flashover.
6.3.4	温度循环 Temperature Cycling	把试验样品分别放入高、低温试验箱中，按下列步骤调试温度： a) 在(-55±2)℃的恒温条件下放置 0.5h； b) 在(85±2)℃的恒温条件下放置 0.5h； 从 a)到 b)为一个循环周期，共进行 25 个循环,恢复 1~2h 后检查。 Mated connectors shall be tested under the following conditions Temperature °C Duration (Minutes) 1 -55 30 2 +25 5Max. 3 +85 30 4 +25 5Max. Step 1 to 4 is one cycle, 25 cycles shall be tested. Recovery time 1~2 hours. GB/T 5095.6 method 11D / EIA-364-32C	外观：无损伤（参照6.1.1） Appearance: No damage.(refer to 6.1.1) 接触电阻：0.02Ω Max。 Contact resistance: 0.02Ω Max. 绝缘电阻：500 MΩ Min. Insulation Resistance ：500 MΩ Min. 耐电压：无击穿和飞弧现象. Withstand Voltage: No Breakdown or flashover.
6.3.5	盐雾 Salt Spray	把试验样品从试验箱顶悬挂下来，采用浓度为(5±1)%(质量百分比)的氯化钠溶液，在(35±2)℃温度下连续雾化 48h,试验后用流动的蒸馏水轻轻洗去表面沉积物。在常温常湿条件下恢复 1～2h 48 hours spray, at temp 35+/-2°C, Salt NaCl mist (5±1)% After test wash parts and return to room ambient for 2hours **GB/T 5095.6 Method 11F /EIA-364-26B**	外观：无损伤(五金件应无露出底金属的严重锈蚀;使用预镀好的型材，其落料面允许有不影响其性能的轻微腐蚀。) Appearance：No Damage (No erosion with material exposed. And with plating material, slight erosion on the cutting surface is acceptable) 接触电阻：0.02Ω Max。 Contact resistance: 0.02Ω Max.

6.3.6	可焊性 Solderability	把试验样品需要焊接的部位浸入焊锡炉中，锡炉温度(245±5)℃；时间(4~5)s Dip solder tails into the molten solder(held at 245±5°C for 4~5 sec. **GB/T 5095.6 Method 12A / EIA-364-52**	上锡率≥95%： Solder coverage: ≥95%
6.3.7	耐焊接热 Resistance to Soldering Heat	1.把试验样品需要焊接的部位浸入焊锡炉中,锡炉温度（260±5）℃；时间（5±1）s 后，在正常条件下恢复 1h。 1.Dip solder tails into the molten solder(held at 260±5°C for 5 ±1 sec. **GB/T 5095.6 Method 12D / EIA-364-56A** 2. 烙铁温度（350±10）℃；手工焊接时间（3±0.5）s。refer to 6.1.1) Solder Temperature: （350±10）℃ Soldering Time: （3±0.5）s **GB/T 5095.6 Method 12E / EIA-364-56A**	外观：无损伤（参照6.1.1） Appearance: No damage.(refer to 6.1.1)

7. 测试分组 Test Sequences （Samples：5PCS）

测试组 GROUP NUMBER	A	B	C	D	E	F	G	H	I	J	K	L	M	N	O	P
外观 Appearance	1	1	1	1	1	1,5	1,5	1,7	1	1,7	1,5	1,7	1,7	1,5	1,3	1,3
端子的插入力 与固定力 Insertion force and Retention Force for Contact	2															
针的固定力 Retention Force for Pin		2														
插簧与插针的插拔力 Insertion and Withdrawal Force for Pin in the Contact			2													
压着部位抗张强度 Crimping Pull Out Force				2												
成品插入力与拔出力 Insertion and Withdrawal Force for Connector					2											
机械振动Random Vibration						3										
机械冲击 Shock							3									
机械寿命 Durability								5								
接触电阻 Low Level Contact Resistance						2,4	2,4	2,6		2,4	2,4	2,4	2,4	2,4		
绝缘电阻 Insulation Resistance								3		5		5	5			
耐电压 Withstand Voltage								4		6		6	6			
温升 Temperature Rise									2							
耐高温 Heat Resistance										3						
耐低温 Cold Resistance											3					
恒定湿热 Humidity												3				
温度循环 Temperature Cycling													3			
盐雾 Salt Spray														3		
可焊性 Solderability															2	
耐焊接热 Resistance to Soldering Heat																2

General Tolerance	Dimension	Tolerance	Rev. No	Location	Description	Reviser	Date
	0~3	±0.13		H8	Updating the content	Ruiwen.Gu	2019.1.12
	3~18	±0.16					
	18~50	±0.31					
	≥50	±0.55					

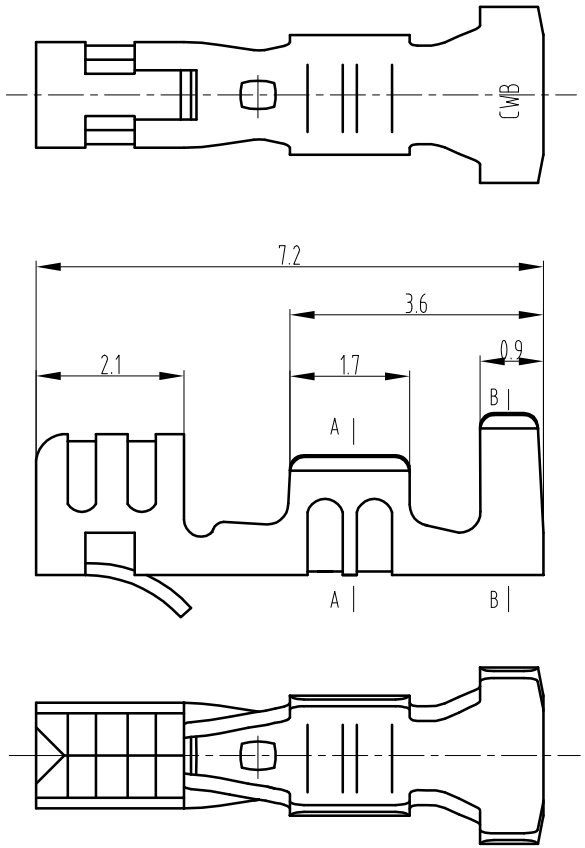

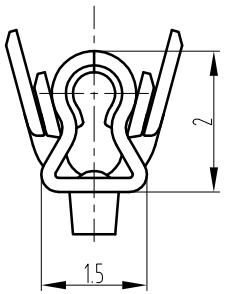

A-A

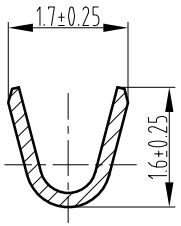

B-B

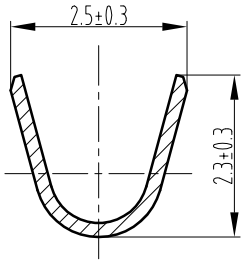

Notes:

1.Material: Phosphor bronze, Thickness=0.2mm;

2.Surface Finish: Tin Plated;

3.Matched Housing: TJC14-nY;

4.Conductor Size: AWG26~AWG22;

5.Packaging: Paper disc;

6.Compliant To The Current RoHS.

CUSTOMER DRAWING						Title: 2.5mm Pitch WTB Socket Contact
Drawn	Li.Qin 2015-11-31	Unit	Scale	Size	Edition	
		mm	4:1	A4	B2	Part No.: TJC14 Contact
Checked	Guoying.Wang 2015-10-31	Sheet No.		1 Of 1		Document No.: CP-DWG-00109
Approved	Nenggui.Bi 2015-11-3	CWB 浙江合兴电子元件有限公司 CWB Electronics (Zhejiang) Co., Ltd.				Specification No.: PS3852

General Tolerance						
Dimension	Tolerance	Rev. No	Location	Description	Reviser	Date
0~3	±0.13		H8	Updating the content	Ruiwen.Gu	2019.1.12
3~18	±0.16					
18~50	±0.31					
≥50	±0.55					

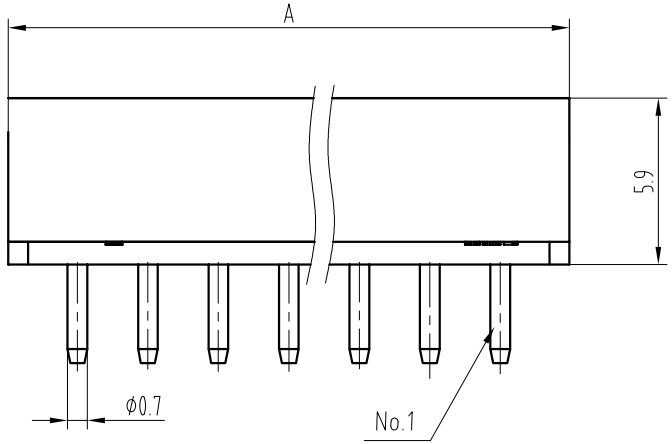

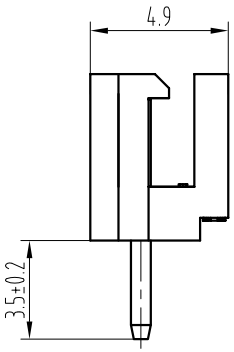

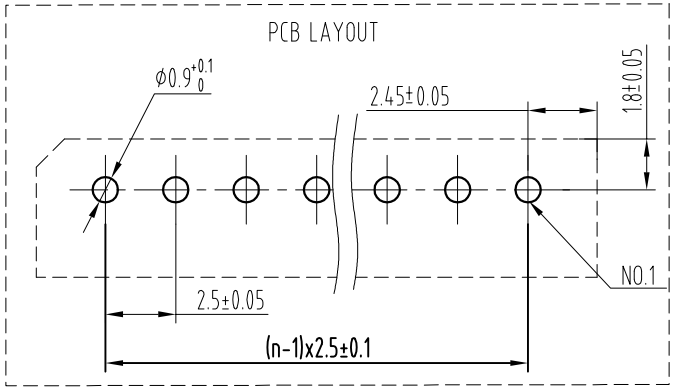

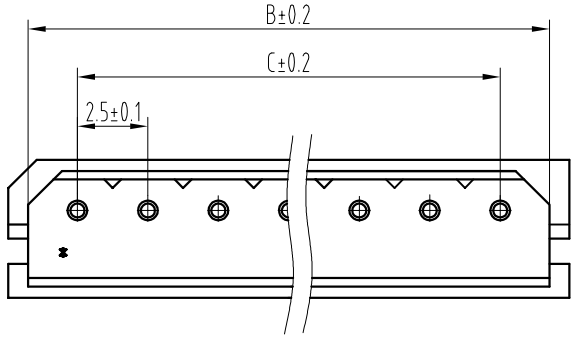

Assembly View
(DIM FYI)

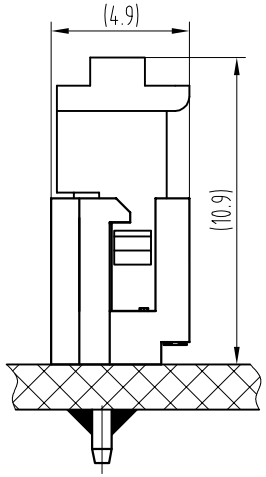

Ckts(n)	Part No.	A	B	C
		Dimensions		
15	TJC14-15A	40.0	38.5	35.0
14	TJC14-14A	37.5	36	32.5
13	TJC14-13A	35.0	33.5	30.0
12	TJC14-12A	32.5	31	27.5
11	TJC14-11A	30.0	28.5	25.0
10	TJC14-10A	27.5	26	22.5
9	TJC14-9A	25.0	23.5	20.0
8	TJC14-8A	22.5	21	17.5
7	TJC14-7A	20.0	18.5	15.0
6	TJC14-6A	17.5	16	12.5
5	TJC14-5A	15.0	13.5	10.0
4	TJC14-4A	12.5	11	7.5
3	TJC14-3A	10.0	8.5	5.0
2	TJC14-2A	7.5	6	2.5

Notes:

1.Material: PA66 UL94 V-0;
Brass,Tin over nickel plated;

2.Matched Housing: TJC14-nY;

3.Packaging: Packing bag;

4.Compliant To The Current RoHS.

CUSTOMER DRAWING						Title: 2.5mm Pitch WTB Header
Drawn	Li.Qin 2015-11-31	Unit	Scale	Size	Edition	
		mm	4:1	A4	B2	Part No.: TJC14-nA
Checked	Guoying.Wang 2015-10-31	Sheet No.		1 Of 1		Document No.: CP-DWG-00106
Approved	Nenggui.Bi 2015-11-3	CWB 浙江合兴电子元件有限公司 CWB Electronics (Zhejiang) Co., Ltd.				Specification No.: PS3852

General Tolerance						
Dimension	Tolerance	Rev. No	Location	Description	Reviser	Date
0~3	±0.13		H8	Updating the content	Ruiwen.Gu	2019.1.12
3~18	±0.16					
18~50	±0.31					
≥50	±0.55					

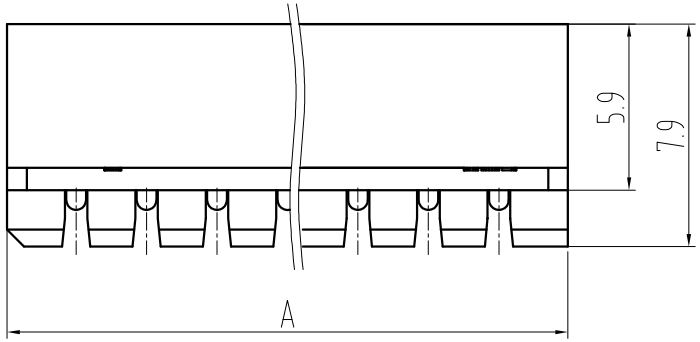

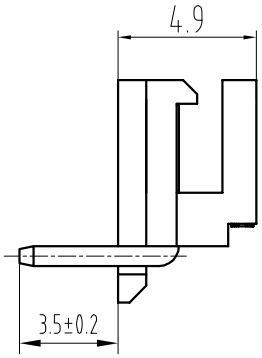

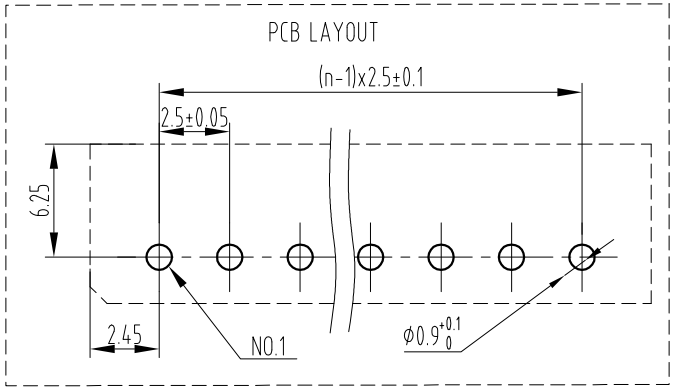

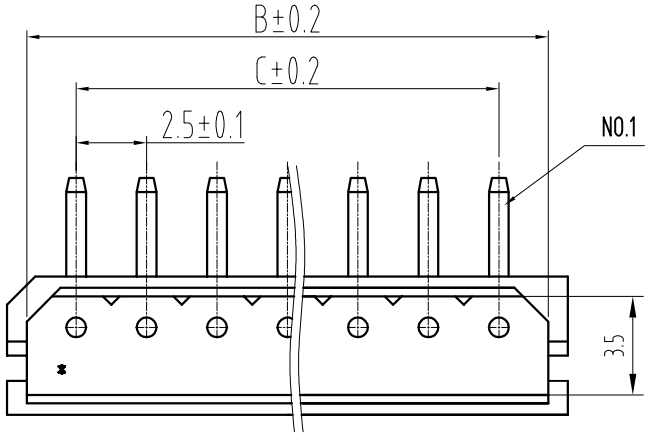

Assembly View
(DIM FYI)

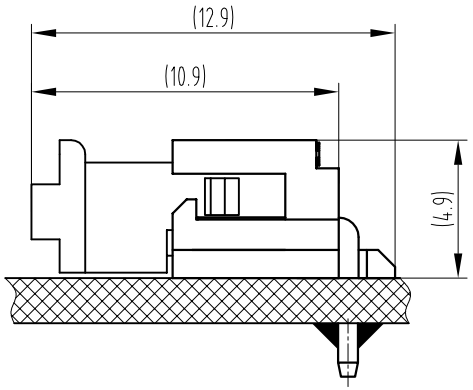

Ckts(n)	Part No.	A	B	C
		Dimensions		
15	TJC14-15AW	40.0	38.5	35.0
14	TJC14-14AW	37.5	36	32.5
13	TJC14-13AW	35.0	33.5	30.0
12	TJC14-12AW	32.5	31	27.5
11	TJC14-11AW	30.0	28.5	25.0
10	TJC14-10AW	27.5	26	22.5
9	TJC14-9AW	25.0	23.5	20.0
8	TJC14-8AW	22.5	21	17.5
7	TJC14-7AW	20.0	18.5	15.0
6	TJC14-6AW	17.5	16	12.5
5	TJC14-5AW	15.0	13.5	10.0
4	TJC14-4AW	12.5	11	7.5
3	TJC14-3AW	10.0	8.5	5.0
2	TJC14-2AW	7.5	6	2.5

Notes:

1.Material: PA66 UL94 V-0;
Brass,Tin over nickel plated;

2.Matched Housing: TJC14-nY;

3.Packaging: Packing bag;

4.Compliant To The Current RoHS.

CUSTOMER DRAWING						Title: 2.5mm Pitch WTB Header
Drawn	Li.Qin 2015-11-31	Unit	Scale	Size	Edition	
Checked	Guoying.Wang 2015-10-31	mm	4:1	A4	B2	Part No.: TJC14-nAW
		Sheet No.		1 Of 1		Document No.: CP-DWG-00107
Approved	Nenggui.Bi 2015-11-3	CWB 浙江合兴电子元件有限公司 CWB Electronics (Zhejiang) Co., Ltd.				Specification No.: PS3852

General Tolerance	Dimension	Tolerance	Rev. No	Location	Description	Reviser	Date
	0~3	±0.13		H8	Updating the content	Ruiwen.Gu	2019.1.12
	3~18	±0.16					
	18~50	±0.31					
	≥50	±0.55					

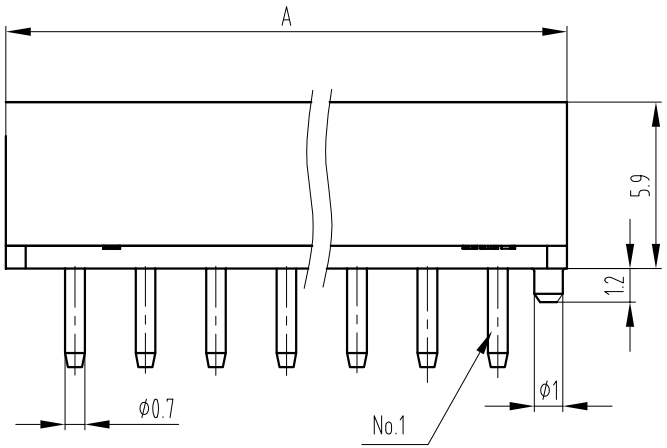

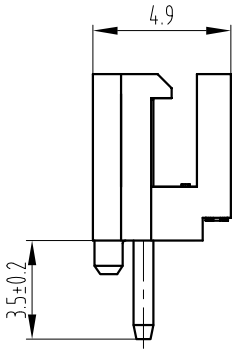

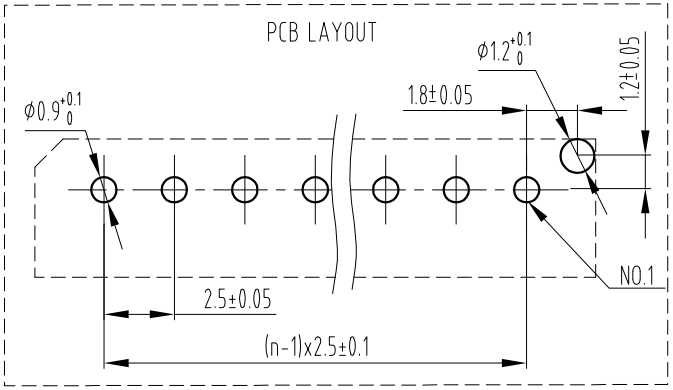

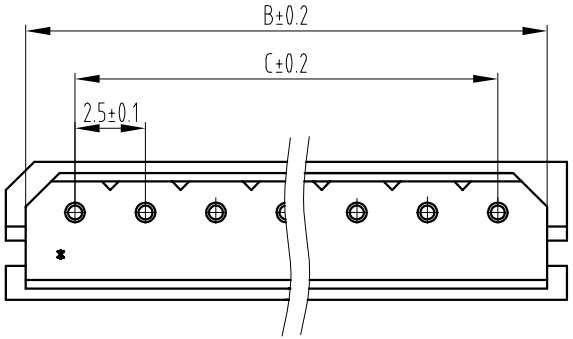

Assembly View
(DIM FYI)

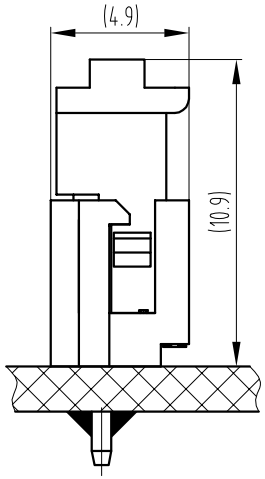

Ckts(n)	Part No.	A	B	C
		Dimensions		
15	TJC14-15AD	40.0	38.5	35.0
14	TJC14-14AD	37.5	36	32.5
13	TJC14-13AD	35.0	33.5	30.0
12	TJC14-12AD	32.5	31	27.5
11	TJC14-11AD	30.0	28.5	25.0
10	TJC14-10AD	27.5	26	22.5
9	TJC14-9AD	25.0	23.5	20.0
8	TJC14-8AD	22.5	21	17.5
7	TJC14-7AD	20.0	18.5	15.0
6	TJC14-6AD	17.5	16	12.5
5	TJC14-5AD	15.0	13.5	10.0
4	TJC14-4AD	12.5	11	7.5
3	TJC14-3AD	10.0	8.5	5.0
2	TJC14-2AD	7.5	6	2.5

Notes:

1.Material: PA66 UL94 V-0;
Brass,Tin over nickel plated;

2.Matched Housing: TJC14-nY;

3.Packaging: Packing bag;

4.Compliant To The Current RoHS.

CUSTOMER DRAWING

		Unit	Scale	Size	Edition
Drawn	Li.Qin 2015-11-31	mm	4:1	A4	B2
Checked	Guoying.Wang 2015-10-31	Sheet No.		1 Of 1	
Approved	Nenggui.Bi 2015-11-3	CWB 浙江合兴电子元件有限公司 CWB Electronics (Zhejiang) Co., Ltd.			

Title: 2.5mm Pitch WTB Header

Part No.: TJC14-nAD

Document No.: CP-DWG-00085

Specification No.: PS3852

General Tolerance	Dimension	Tolerance	Rev. No	Location	Description	Reviser	Date
	0~3	±0.13		H8	Updating the content	Ruiwen.Gu	2019.1.12
	3~18	±0.16					
	18~50	±0.31					
	≥50	±0.55					

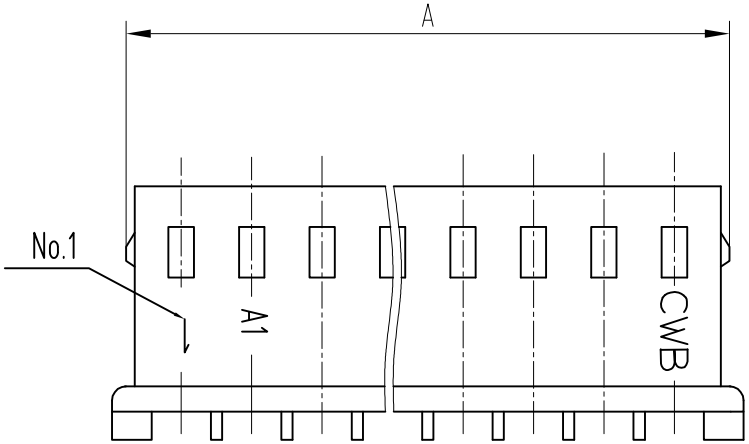

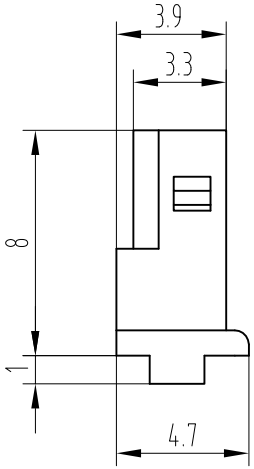

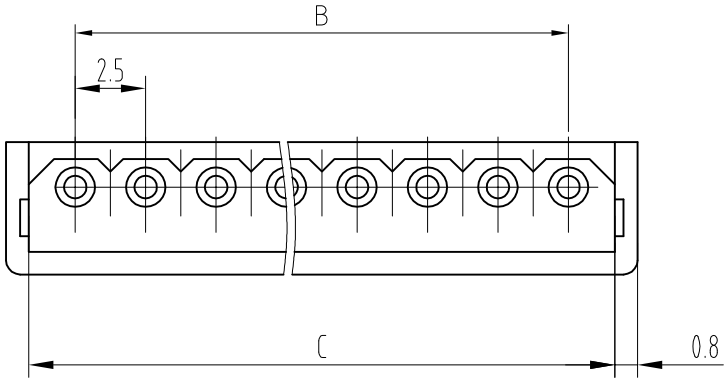

Ckts(n)	Part No.	A	B	C
		Dimensions		
15	TJC14-15Y	38.9	35.0	38.3
14	TJC14-14Y	36.4	32.5	35.8
13	TJC14-13Y	33.9	30.0	33.3
12	TJC14-12Y	31.4	27.5	30.8
11	TJC14-11Y	28.9	25.0	28.3
10	TJC14-10Y	26.4	22.5	25.8
9	TJC14-9Y	23.9	20.0	23.3
8	TJC14-8Y	21.4	17.5	20.8
7	TJC14-7Y	18.9	15.0	18.3
6	TJC14-6Y	16.4	12.5	15.8
5	TJC14-5Y	13.9	10.0	13.3
4	TJC14-4Y	11.4	7.5	10.8
3	TJC14-3Y	8.9	5.0	8.3
2	TJC14-2Y	6.4	2.5	5.8

Notes:

1.Material: PA66 UL94 V-0;

2.Matched Header: TJC14-nA,TJC14-nAD,TJC14-nAW;

3.Matched Terminal: TJC14

4.Packaging: Packing bag;

5.Compliant To The Current RoHS.

CUSTOMER DRAWING						Title: 2.5mm Pitch WTB Housing
Drawn	Li.Qin 2015-11-31	Unit	Scale	Size	Edition	
		mm	4:1	A4	B2	Part No.: TJC14-nY
Checked	Guoying.Wang 2015-10-31	Sheet No.		1 Of 1		Document No.: CP-DWG-00108
Approved	Nenggui.Bi 2015-11-3	CWB 浙江合兴电子元件有限公司 CWB Electronics (Zhejiang) Co., Ltd.				Specification No.: PS3852

General Tolerance	Dimension	Tolerance	Rev. No	Location	Description	Reviser	Date
	0~3	±0.13		H8	Updating the content	Ruiwen.Gu	2019.1.12
	3~18	±0.16					
	18~50	±0.31					
	≥50	±0.55					

Packing bag

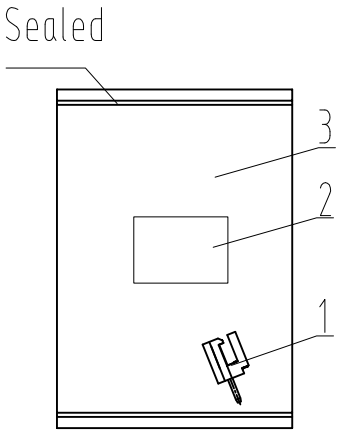

Packing box

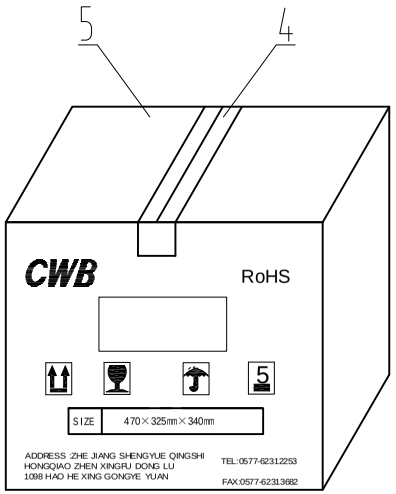

Number	Designation
5	Gummed tape
4	Packing box
3	Packing bag
2	Certificate
1	TJC14 series header

Part No.	Part No.	Pcs/bag	Part No.	Pcs/bag
TJC14-15A	TJC14-15AD	500	TJC14-15AW	500
TJC14-14A	TJC14-14AD	500	TJC14-14AW	500
TJC14-13A	TJC14-13AD	1000	TJC14-13AW	500
TJC14-12A	TJC14-12AD	1000	TJC14-12AW	500
TJC14-11A	TJC14-11AD	1000	TJC14-11AW	1000
TJC14-10A	TJC14-10AD	1000	TJC14-10AW	1000
TJC14-9A	TJC14-9AD	1000	TJC14-9AW	1000
TJC14-8A	TJC14-8AD	1000	TJC14-8AW	1000
TJC14-7A	TJC14-7AD	1000	TJC14-7AW	1000
TJC14-6A	TJC14-6AD	1000	TJC14-6AW	1000
TJC14-5A	TJC14-5AD	1000	TJC14-5AW	1000
TJC14-4A	TJC14-4AD	1000	TJC14-4AW	1000
TJC14-3A	TJC14-3AD	1000	TJC14-3AW	1000
TJC14-2A	TJC14-2AD	1000	TJC14-2AW	1000

CUSTOMER DRAWING

		Unit	Scale	Size	Edition
Drawn	Li.Qin 2015-10-31	mm	/	A4	B2
Checked	Guoying.Wang 2015-10-31	Sheet No.		1 Of 1	
Approved	Nenggui.Bi 2015-11-3	CWB 浙江合兴电子元件有限公司 CWB Electronics (Zhejiang) Co., Ltd.			

Title: Packaging Specification of 2.5mm Pitch WTB Header

Part No.: TJC14-nA/AD/AW

Document No.: BZ-DWG-00063

Specification No.: PS3852

General Tolerance	Dimension	Tolerance	Rev. No	Location	Description	Reviser	Date
	0~3	±0.13		H8	Updating the content	Ruiwen.Gu	2019.1.12
	3~18	±0.16					
	18~50	±0.31					
	≥50	±0.55					

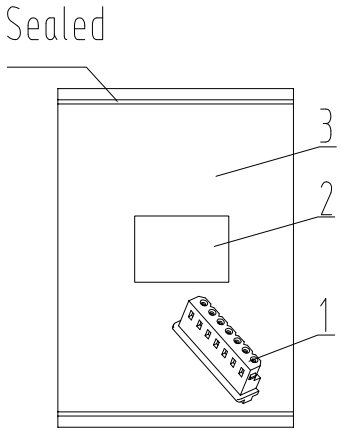

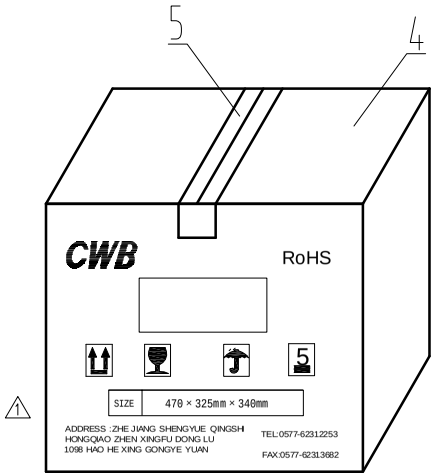

Number	Designation
5	Gummed tape
4	Packing box
3	Packing bag
2	Certificate
1	TJC14-nY

Part No.	Pcs/bag	Remarks
TJC14-15Y	1000	
TJC14-14Y	1000	
TJC14-13Y	1000	
TJC14-12Y	1000	
TJC14-11Y	1000	
TJC14-10Y	1000	
TJC14-9Y	1000	
TJC14-8Y	1000	
TJC14-7Y	1000	
TJC14-6Y	1000	
TJC14-5Y	1000	
TJC14-4Y	1000	
TJC14-3Y	1000	
TJC14-2Y	1000	

CUSTOMER DRAWING

		Unit	Scale	Size	Edition
Drawn	Li.Qin 2015-10-31	mm	/	A4	B2
Checked	Guoying Wang 2017-11-16	Sheet No.		1 Of 1	
Approved	Dongxu.Liu 2017-11-16	CWB 浙江合兴电子元件有限公司 CWB Electronics (Zhejiang) Co., Ltd.			

Title: Packaging Specification of 2.5mm Pitch WTB Socket Housing

Part No.: TJC14-nY

Document No.: BZ-DWG-00064

Specification No.: PS3852

General Tolerance	Dimension	Tolerance	Rev. No	Location	Description	Reviser	Date
	0~3	±0.13		H8	Updating the content	Ruiwen.Gu	2019.1.12
	3~18	±0.16					
	18~50	±0.31					
	≥50	±0.55					

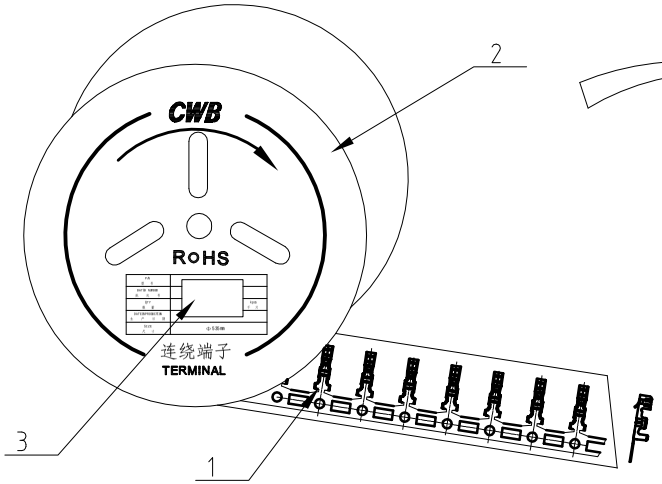

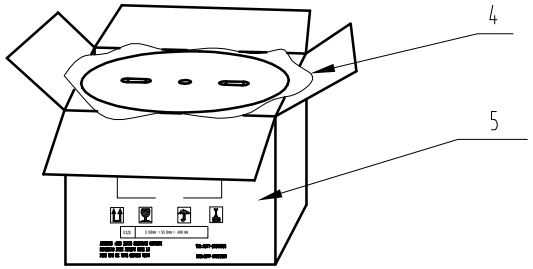

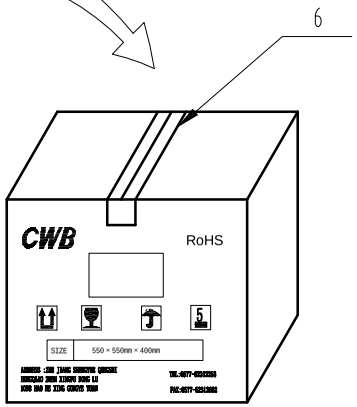

Number	Designation	Remarks
6	Gummed tape	
5	Packing box	150000PCS/box
4	Packing bag	150000PCS/bag
3	Packing Reel	10000PCS/disc
2	Certificate	
1	TJC14	

CUSTOMER DRAWING						Title: Packaging Specification of 2.5mm Pitch WTB Contact
Drawn	Li.Qin 2015-10-31	Unit	Scale	Size	Edition	
		mm	/	A4	B2	Part No.: TJC14
Checked	Guoying.Wang 2015-10-31	Sheet No.		1 Of 1		Document No.: BZ-DWG-00065
Approved	Nenggui.Bi 2015-11-3	CWB 浙江合兴电子元件有限公司 CWB Electronics (Zhejiang) Co., Ltd.				Specification No.: PS3852